TOTAL PETROCHEMICALS

Extrusion best-practices for Polystyrene

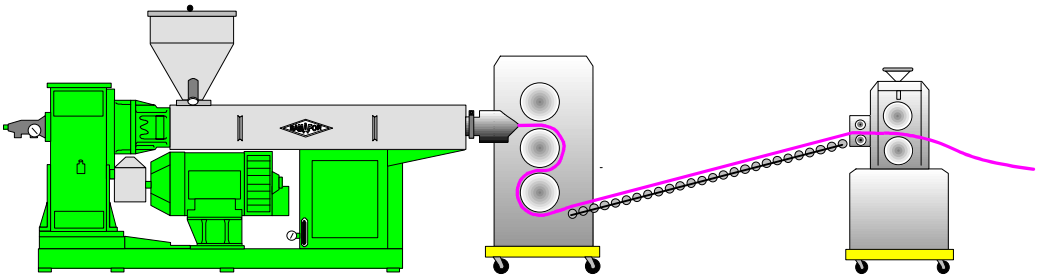

In order to extrude sheet in Polystyrene, single screw extruders, whose diameter can range from 45 to 150 mm are generally used in order to obtain both output and melt quality.
The length of the extruder should be long enough to ensure that homogeneous plasticizing occurs, as well as providing accurate control of material temperature. Modern extruders have an L/D ratio (Length/Diameter) of between 28 and 35; this kind of equipment is perfectly suited for POLYSTYRENE processing. It is also possible to use older equipment with shorter L/D ratios, as long as the screw geometry meets the mixing and distributing requirements

The following table gives an estimation of the relationship between extruder characteristics (when fitted with a non grooved feed section) and Polystyrene output:

Diameter (mm)	L/D Ratio	Drive power (kW)	Output (kg/h)
45	24	50	30 to 50
60	24	80	60 to 100
60	30	80	80 to 140
90	24	120	140 to 190
90	30	120	200 to 400
120	30	180	400 to 900

By increasing the L/D ratio from 24 to 30 D it is possible to obtain an output increase of about 15 %. Although we absolutely do not recommend it, a grooved fed section may give an output increase from 25 and 40 %. The following equation can be used to determine (approximately) the output of an extruder fitted with a 24 D screw:

$$\boxed{\frac{Q}{N} = 8.6 * 10^{-5} * D^2 * H * M_V}$$

Q : output (kg/h)
N : screw speed (rpm)
D : diameter (mm)
H : flight depth (mm)
M_V : volumetric mass in molten state

The screw speed while extruding Polystyrene is generally less than 180 rpm, because the rheology of the products is designed for low rotational speed. An extruder should have a operating window ranging from 10% to 95 % of maximum rotational speed.

2.3) the extrusion temperature profile

The extrusion temperatures must be developed for each individual application, because they are dependent on a number of parameters:

- Grade of POLYSTYRENE being processed
- Screw geometry and compression ratio,
- The clearance between the screw and the barrel,
- The design of the die (land compression and length),
- The extruder size
- The position of the thermocouple

And last but not the least the screw rotation speed.

As an example, a typical temperature profile for a 90 mm diameter vented extruder is:

- Barrel : 180-190-180-210°C,
- Adapter : 210°C,
- Die : 200°C.

In the case of a two stage screw, the material has to reach the end of the first stage in a plasticised state sufficient to allow volatiles to go be extracted
A drop of temperature at the entrance of the second stage of the screw is often necessary to enable back pressure to be generated. More generally this should be done by increasing the number of screens.
The various grades of POLYSTYRENE designed for extrusion will tolerate some shear heating without degradation (of around 20°C), when it is unavoidable , provided that the maximum melt temperature (shear heating included) is not over 240-250°C (500 °F)
The material melt temperature is influenced by two factors: the thermal input (by electrical or oil heaters), and shear. The larger extruders normally generate higher levels of mechanical shear heating. It is commonly understood that with, say a 120 mm extruder, only around 10 to 20% of the total heat is produced by the machine heating system, the remainder is generated by mechanical shear.

Thermal regulation

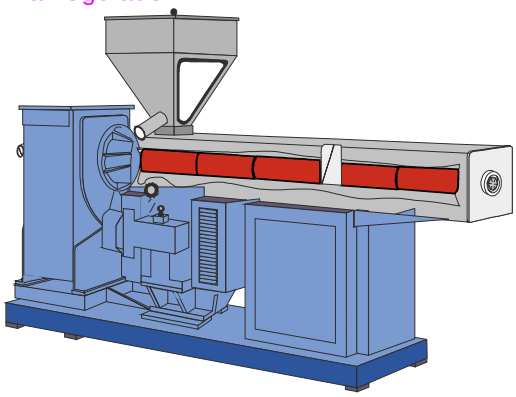

A 28 to 35 D extruder should have a barrel fitted with at least 5 or 6 heating zones. Cooling fans or water cooling should also be incorporated into these heating elements, to ensure precise temperature regulation through the different plasticising stages.

Fig 3

This is particularly true for the upstream zone (feed end) of the extruder, where self heating is occurring due to high shear, and friction between the pellets. At the feed throat, cooling will be provided using water circulation to prevent premature melting of the material, which would cause bridging in the hopper and erratic feeding. In addition temperature the first zone should be controlled to prevent premature melting.

Barrel

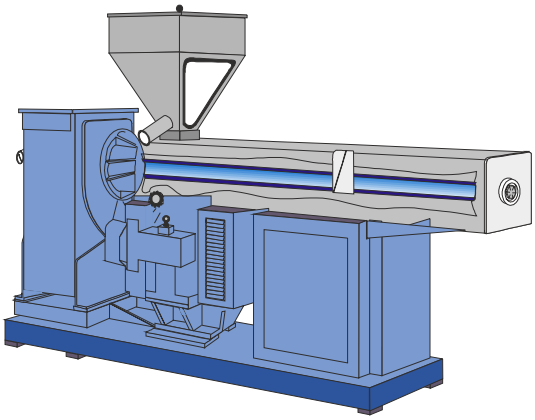

Fig 4

The one piece barrel is made out of nitrided steel or in the newest type of extruders a barrel liner in steel (Xaloy or Reloy type)

Whilst avoiding a mirror like gloss, it is advisable to have the surface finish of the interior of the barrel smooth, especially in the melting zone.
To extrude POLYSTYRENE using a non vented extruder, we recommend(we don't make this recommendation and it is seldom done) drying the polystyrene for 2 to 4 hours in proprietary material dryer at 70-80°C to remove residual humidity (on the pellets but not in the pellets)
For sheet extrusion, even when using dried materials, we advise the use of a vented extruder, as volatiles created during processing can affect the quality of the sheet surface finish.

2.4) the screw

The profile

The screw design is the most important part of the extruder. Three functions, generally associated with different screw zones, can be identified from feed to discharge.

- a feed zone where conveying of the pelletised material takes place, and also where melting starts due to contact with the barrel or from shear;
- a compression zone, where the material is compressed as the screw root diameter increases, and where melting is completed.
- a metering zone where the screw root diameter is constant; in this section the material is molten and homogenised (pressure, temperature and viscosity) controlled by a reduced level of shear.

For vented extrudes, two stage screws are used, which can be considered as linear combination of two classic three zone screws (feeding, compression, metering).

The objective of the first stage is to plasticise the material as much as possible. Following this first stage, the molten material is decompressed in a decompression zone by decreasing the screw root diameter. The decompression allows the vacuum system to extract any volatiles from the polymer through the barrel vent. The vent may either be connected to a vacuum pump, or simply left open to atmosphere, provided suitable fume extraction is provided. The vent can be located in the centre of the barrel, or more commonly 2/3 of the way along the barrel.
The second stage serves as a conveyor and a compressor (mixing, provide consistent pressure) of the molten material (effectively pumping a (semi liquid)). One of the advantages of this type of screw is in separating the two different stages of the extrusion [process, which leads to a much greater flexibility for adjusting the temperature profile. This allows a different set of temperatures to be created in the two stages of the process.

Excessive clearance between the screw and the barrel is often a reason for extrusion problems such as loss of output, output irregularities, or air trapped in the extrudate, and so on: this clearance must be minimised, taking into account machining possibilities and extruder requirements particularly in the zone where the polymer is in its molten state.
The size of this clearance depends of type and diameter of the extruder screw but also from age and wear

Flight

In most cases, the screw flight outside diameter is constant along the screw length. Normal screw designs, where compression is obtained by increasing the screw root diameter are generally suitable for Polystyrene's extrusion.

Surface aspect

The screw must be cleaned and polished with care in order to prevent material sticking, and to ease Polystyrene's flowing on the screw. For the POLYSTYRENE, chroming isn't required, only nitrided steel is necessary for an optimal life span.

Screw cooling

In the case of high screw speeds, it can be of useful to regulate the temperature of the screw using an oil or water circulating system. This method linked with a barrel cooling, allows better material temperature regulation, however screw cooling is not mandatory for the successful processing of POLYSTYRENE.

2.5) Screen Pack

The screen pack and is situated between the screw and the extruder's head; this pack is based upon a number of circular sheets of wire mesh supported by a breaker plate. To improve the filtration and homogenising results, a finer mesh may also be placed on the upstream (screw side) of the pack.

Screen pack examples

Sheet thickness	0.8 to 2 mm	2 to 4 mm
Number of filters	1 - 1 - 1	1 - 2 - 1
Composition of screen pack	60 - 80 - 60	40 - 80 - 40

The screen pack mesh has several purposes:

- by creating a back pressure, it serves as a pressure damper, which allows it to absorb pressure fluctuations which could exist in spite of the harmonising effects of the metering zone of the screw. It also helps fill the second stage of a 2 stage screw to get mixing and less pressure variation.
- it stops unmelted pellets or impurities from progressing to, and thereby blocking, the die tip.
- it transforms the helical polymer flow at the end of the screw into a regular parallel flow
- and finally by producing multiple flow paths, it creates improved temperature homogenisation.

2.6) Adapters

These are generally pipes linking the extruders head and the die or the melt pump. They are electrically heated but generally aren't cooled. It is important to maintain accurate temperature regulation and avoid excessive length, to avoid material stagnation. Any bends, or section changes should be carefully designed to avoid generating high shear, and excessive pressure drop. Their surface finish should be as smooth as possible to ensure that the material flow is as uniform as possible. We recommend setting these temperatures the same as the melt temperature.

2.7) Static mixers

The purpose of this equipment is to homogenise the molten material and promote good dispersion of pigments or additives which could be blended with into POLYSTYRENE. If the extruder is short, static mixers can help to obtain homogenised molten product. The length of these elements should be as small as possible to keep the residence time low. Thermal regulation is again controlled by electrical heaters and it is important that the temperature is maintained to prevent excessive shear being generated.

2.8) Melt pump

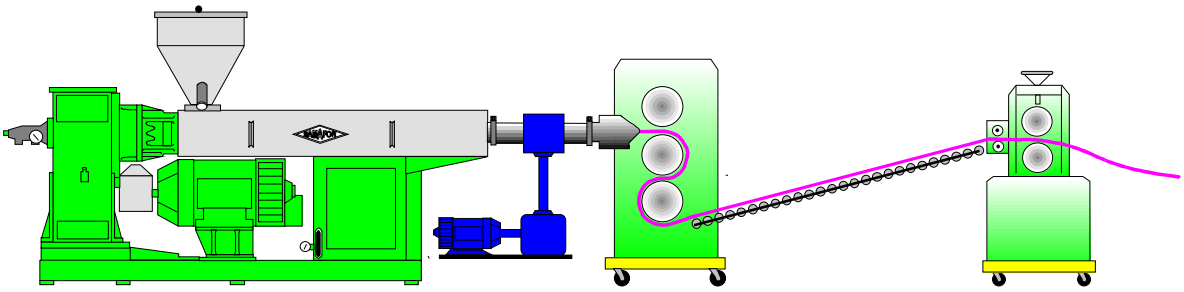

Fig 6

The function of a melt pumps is to maintain a very stable output. A control system is used to control the extruder screw speed to maintain a constant pressure at the pump in feed. The pump is a set of gears through which the material passes,. Generally the gear pump control

set point is the pressure at the discharge of the pump and the control system adjusts screw speed in to maintain this set point.

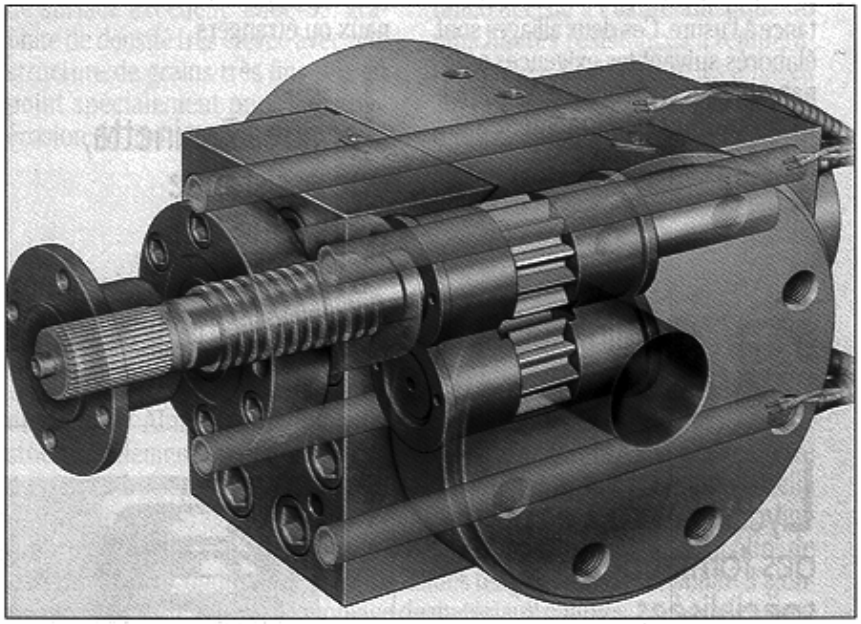

Fig 7

2.9) the die

For sheet extrusion of POLYSTYRENE', there are several die design possibilities which have evolved over time.

- The T die with distribution chamber (fig.),

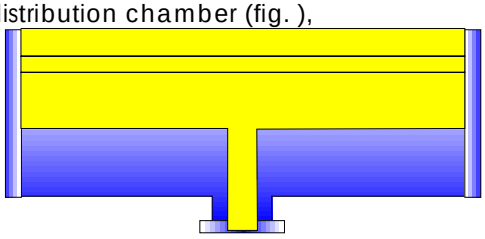

Fig 8

- A coat hanger die or fish tail die (fig.).

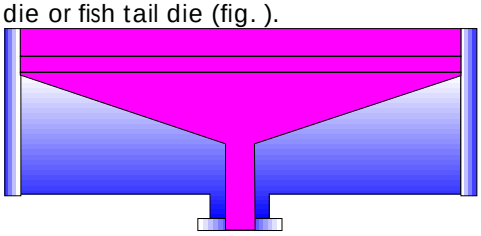

Fig 9

The die's principle function is to transform a flow inside cubic or cylindrical pipe into a regular flow with a high width to thickness ratio.

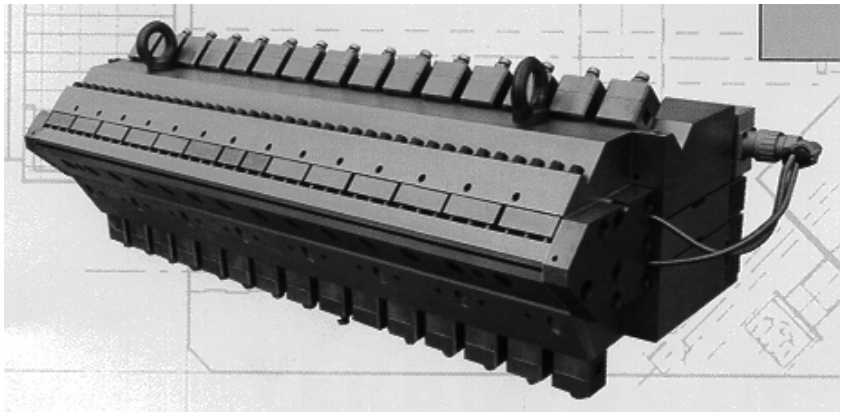

Fig 10

Land

The land is the internal straight section of the die, immediately behind the die lip. The land's geometry is depending upon the required thickness of the sheet.

Example of land lengths

Desired Thickness	Land length
< 0.6 mm	20 x thickness desired
0.6 to 1 mm	15 - 20 x thickness desired
1 to 2 mm	15 x thickness desired
2 to 4 mm	15 x thickness desired
> 4 mm	12 x thickness desired

Lips gap

To obtain the required sheet thickness, the die lip gap must be set slightly wider than the sheet thickness required: a setting of around 1.2 to 1.5 times the final thickness is recommended (in US a value of over 10% of the final thickness is recommended). The larger the die gap however, the higher the orientation will be in the material. For the purposes of good die design, it is important that the land area immediately behind the lips is at least parallel. An improved solution is to have a reducing taper on the land, with the gap progressively reducing as it approaches the die lips.

Die gap regulation

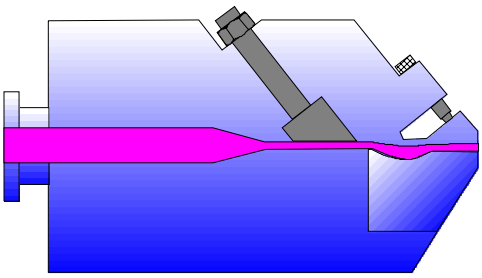

Fig 11

A choker bar can be used to influence preferential flow inside the die. This takes place in the preland zone of the die, and allows the operator to counteract any tendency for die “lensing”. By restricting the flow in the centre of the die, material will be forced to the outer edges of the die. We recommend the choker bar as the preferred method of gauge adjustment.

Another method in Europe of regulating the material flow in the die is to change the temperatures of the different zones of the die: In US we recommend against using temp to

adjust gauge. We recommend the die be set at the melt temperature. Raised temperatures at the sides of the die will make the product less viscous in this zone, and it will then tend to flow more easily (the pressure drop in this zone being decreased).

The final option is to increase the die lip's gap which determines the final pressure drop. In US we suggest using lip adjustments as a last resort. This setting can be done manually or using a fully automatic closed loop control system coupled with in-line thickness measurement, which corrects thickness variations using self adjusting die bolts.

2.10) Calendaring

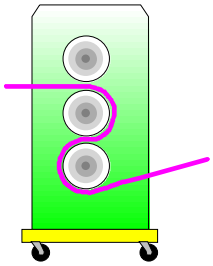

Fig 12

The calendar's (sometimes known as the roll stack) purpose is to impart a good surface finish onto the product without warping and to reduce its temperature to a level where it can be manipulated without deformation. The calendar is generally built of between three and five rolls and it must be exactly parallel to the die lips.

The roll gap should be approximately equal to the required thickness of the sheet. *Normally the gap is not used to determine the final thickness*. The bank should not roll !!!
To avoid excessive orientation, the shortest possible distance between the die and the calendar rolls should be used, and the die gap and roll gaps must also be closely matched.
The rolls diameter varies between 250 mm to 600 mm. For high outputs, large diameter rolls should be used to extend the contact time, thereby improving the cooling action.
To improve sheet gloss, high roll temperature should be used. However the roll temperature should be a few degrees less than the sticking temperature of the material. (We suggest 10 F)
These temperatures are dependent on the equipment, but should ideally be around 40 to 60°C in normal conditions.

2.11) other types of equipments

Cooling table and roll up station

After the calendar rolls, the sheet is carried on a cooling table of small rolls or a conveyor. The purpose of this cooling table (or conveyor) is providing support for the sheet allowing it to be wound or cut correctly.

A the end of the conveyor the sheet is pulled between two rubber coated rolls, known as the haul off, whose speed can be adjusted. It is important that the tension of the sheet is not too high, to again minimise orientation.

Width trimming

This operation is done on thin gauge sheets using static knives, and for thick gauge sheets rotating knives. Cutting POLYSTYRENE does not cause any particular difficulty but the quality of the cut achieved does depend on the ratio of HIPS to GPPS.

Winding piling

After the haul off station the sheet is either wound on conventional winding equipment or cut into precise lengths using a guillotine.

Thickness control

Thickness control is achieved using a gauging device. Various options are available such as nuclear gauging systems, and mechanical or optical systems. The gauge should be calibrated regularly. In some cases the gauge can be used for automatic die gap setting.